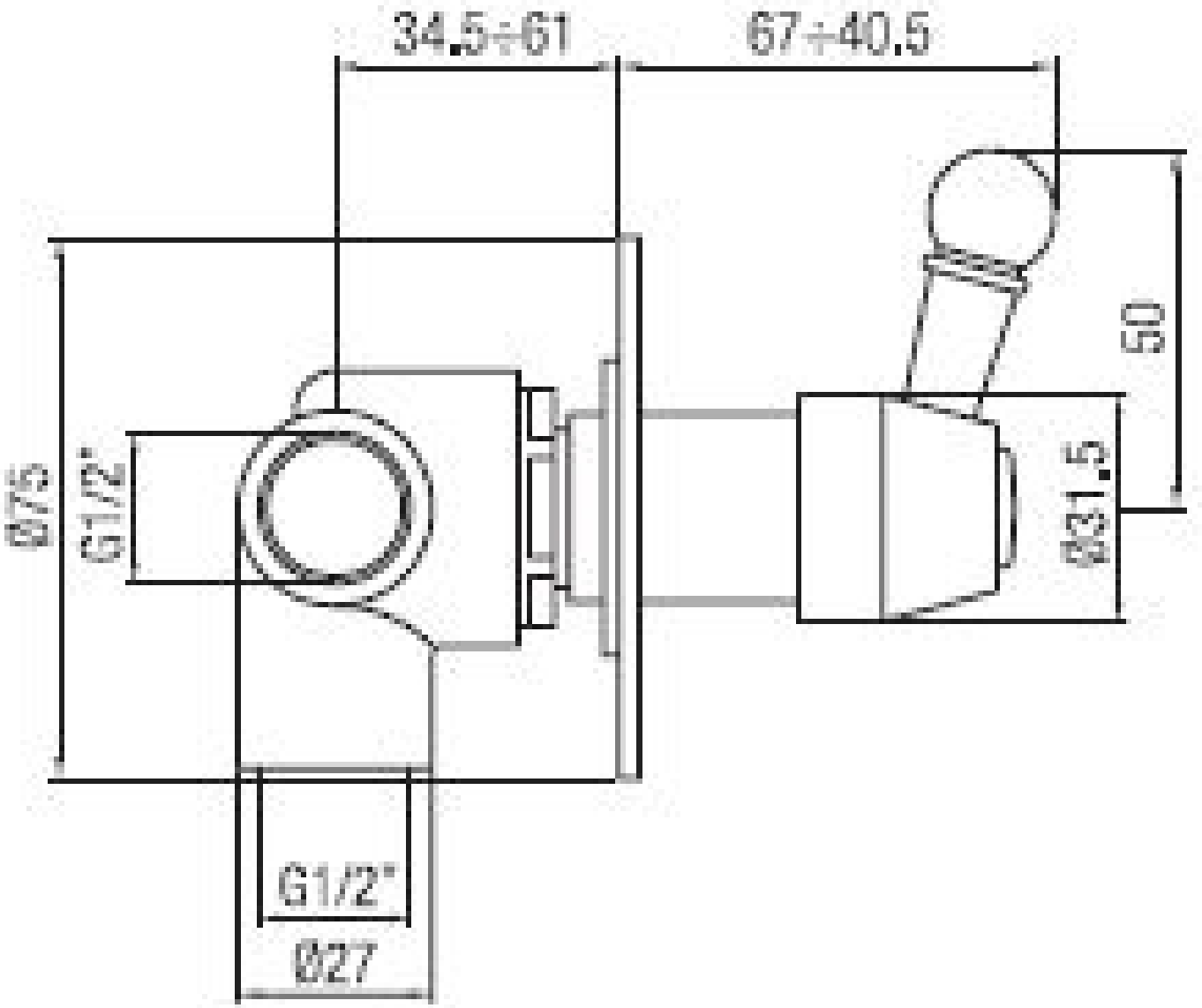
34.5÷61
67÷40.5
Ø75
G1/2"
G1/2"
Ø27
50
Ø31.5