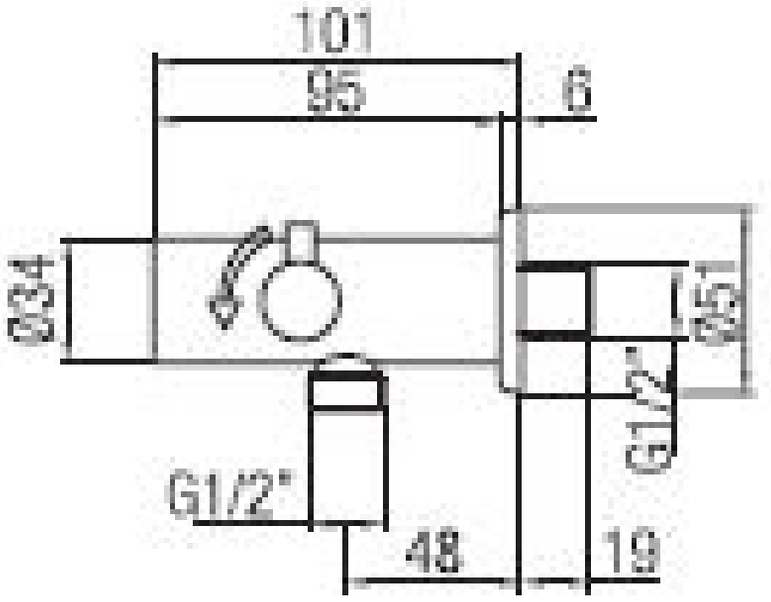
101
95
6
Ø34
Ø51
G1/2"
G1/2"
48
19

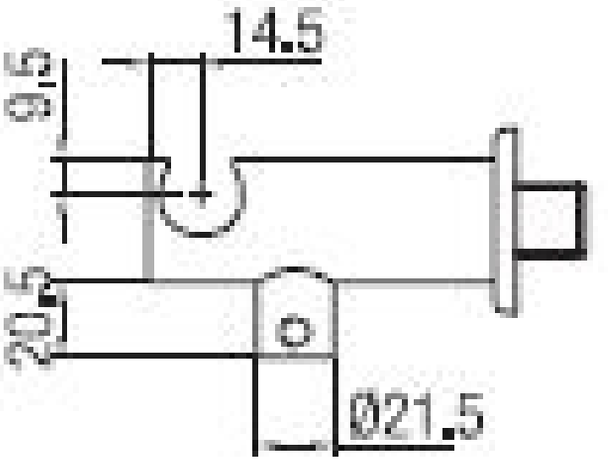
14.5
9.5
20.5
Ø21.5

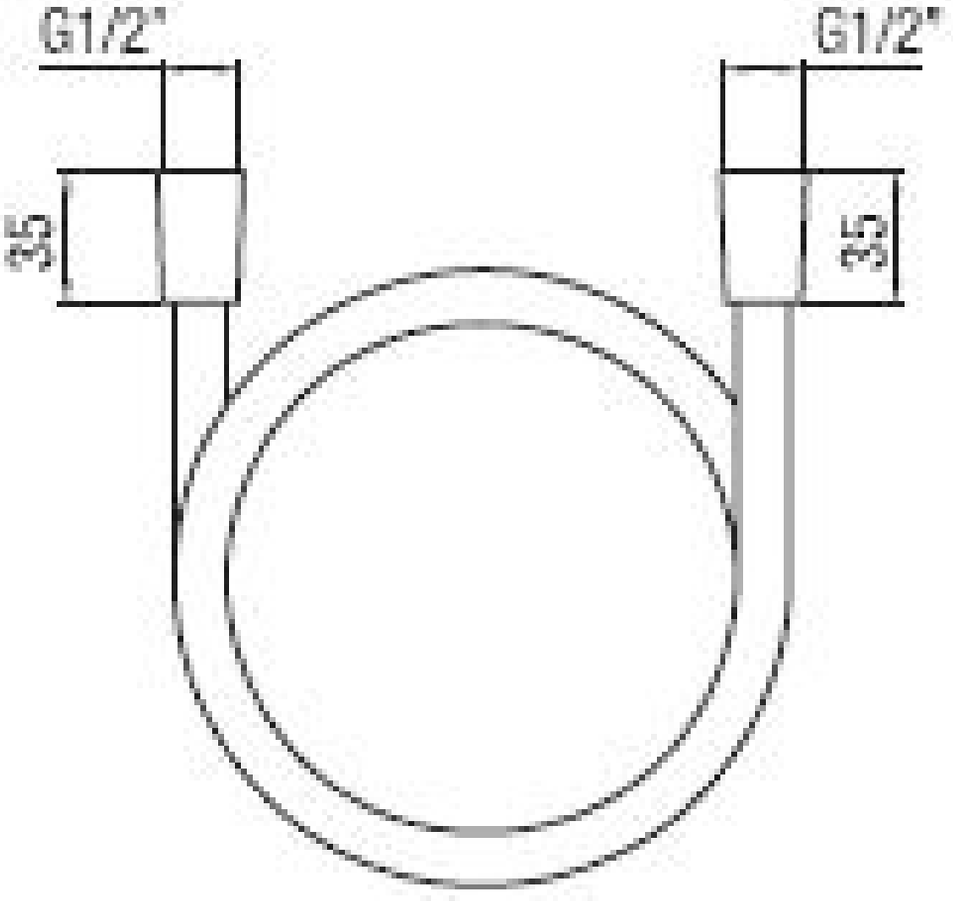
G1/2"
G1/2"
35
35

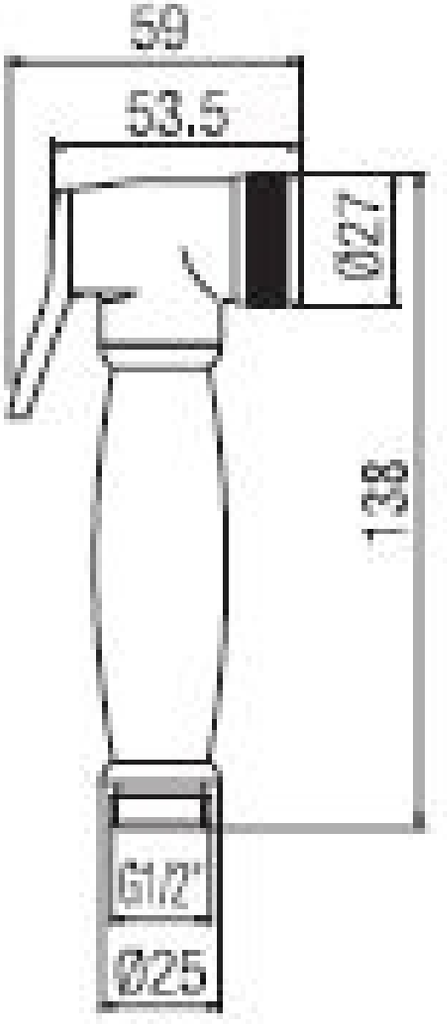
59
53.5
Ø27
138
G1/2"
Ø25