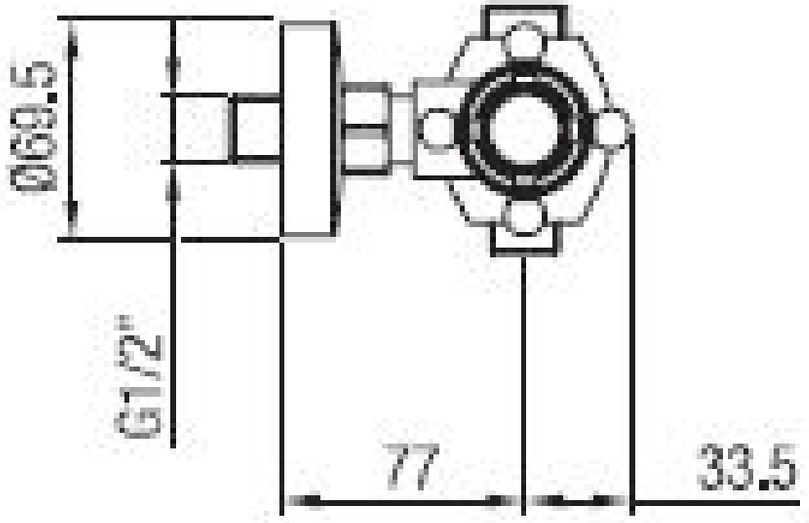
Ø68.5
G1/2"
77
33.5

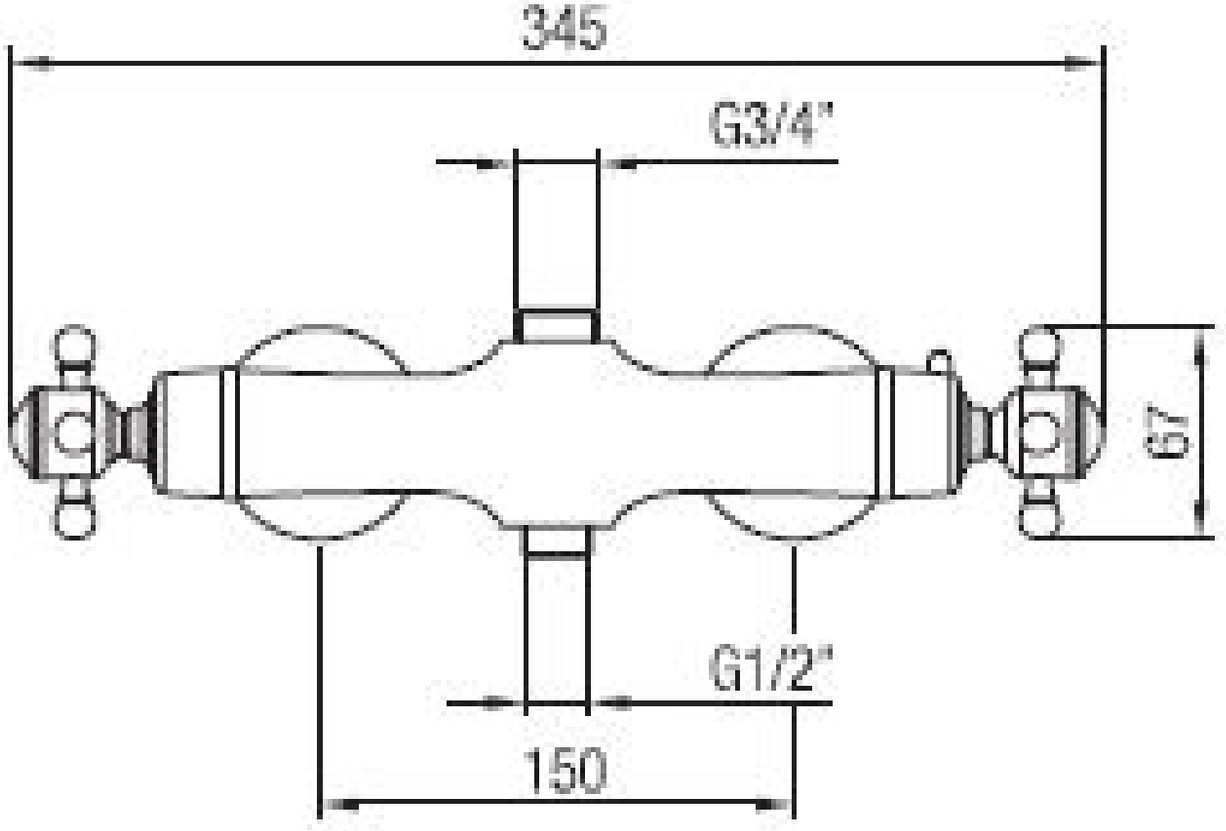
345
G3/4"
67
G1/2"
150