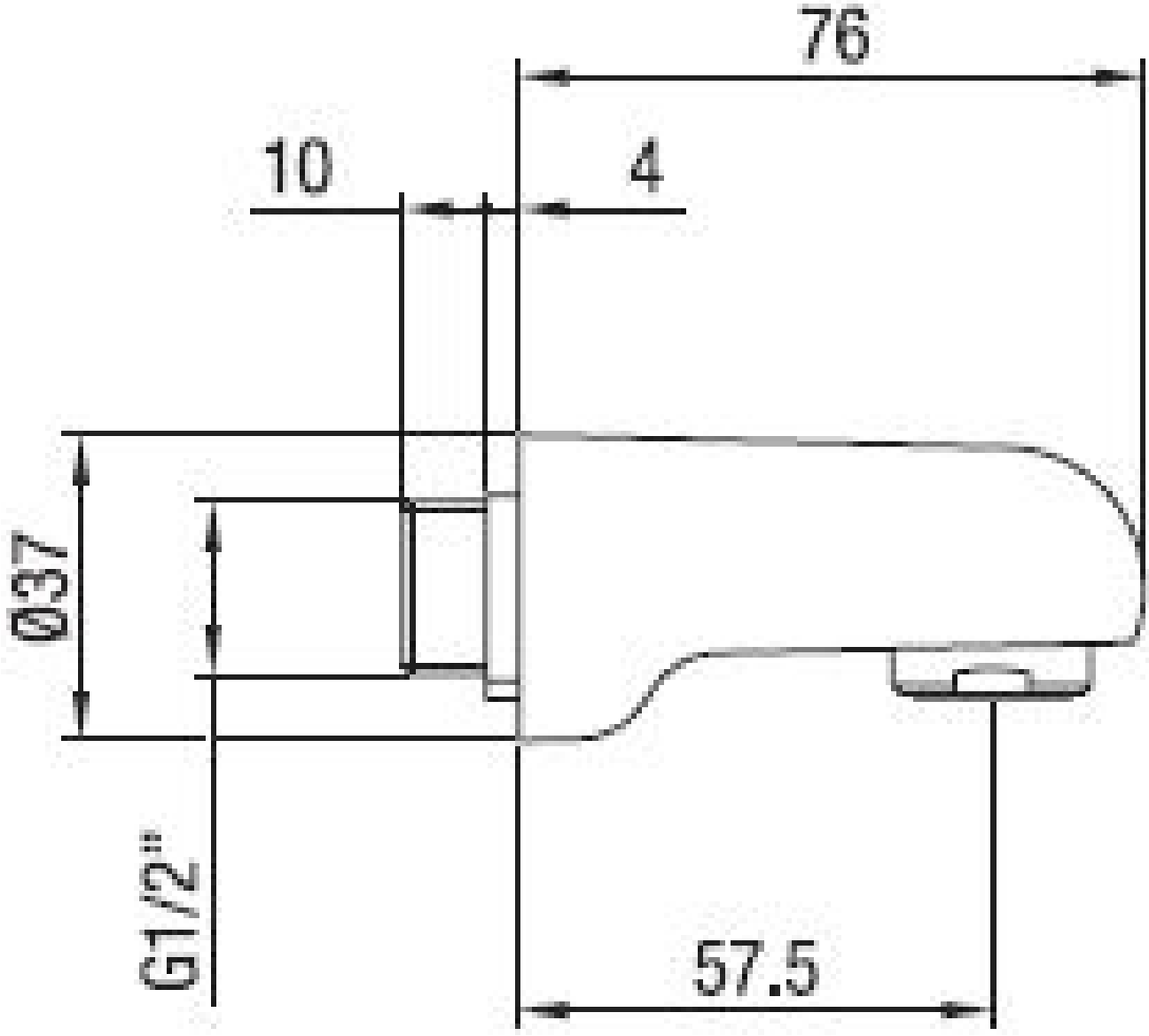
76
10
4
Ø37
G1/2"
57.5